Downloaded from www.g7syw.com

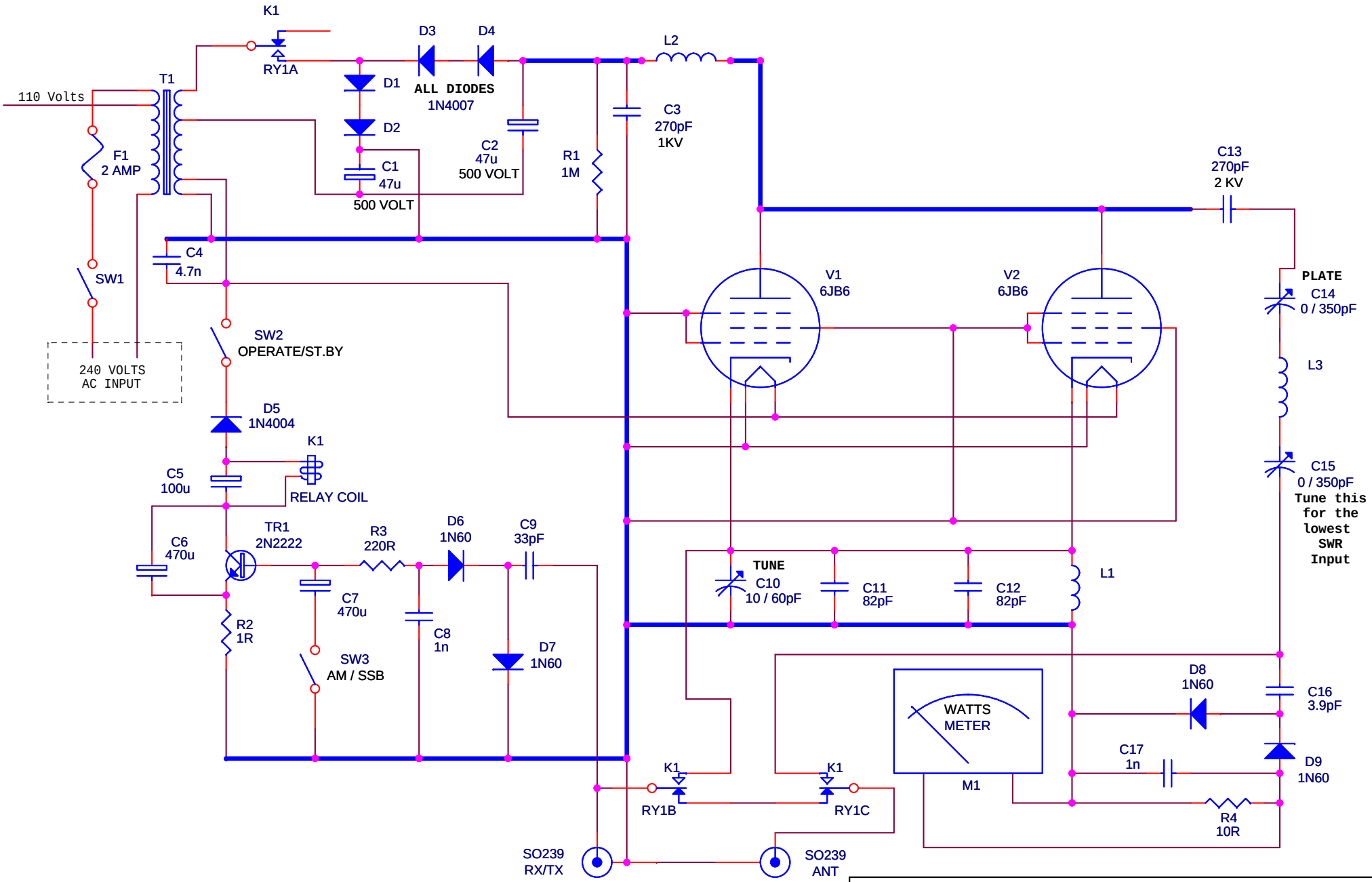

DRAWN BY: Rick Jackson Euro Radio Co

Title: BREMI:BRL-200 AMP

Size	Document Number	Rev
A	BRL200.SCH	A

Date: Monday, November 27, 2006 Sheet 1 of 1

www.g7syw.com