Downloaded from www.g7syw.com

TURNER..... M+2U and JM+2U

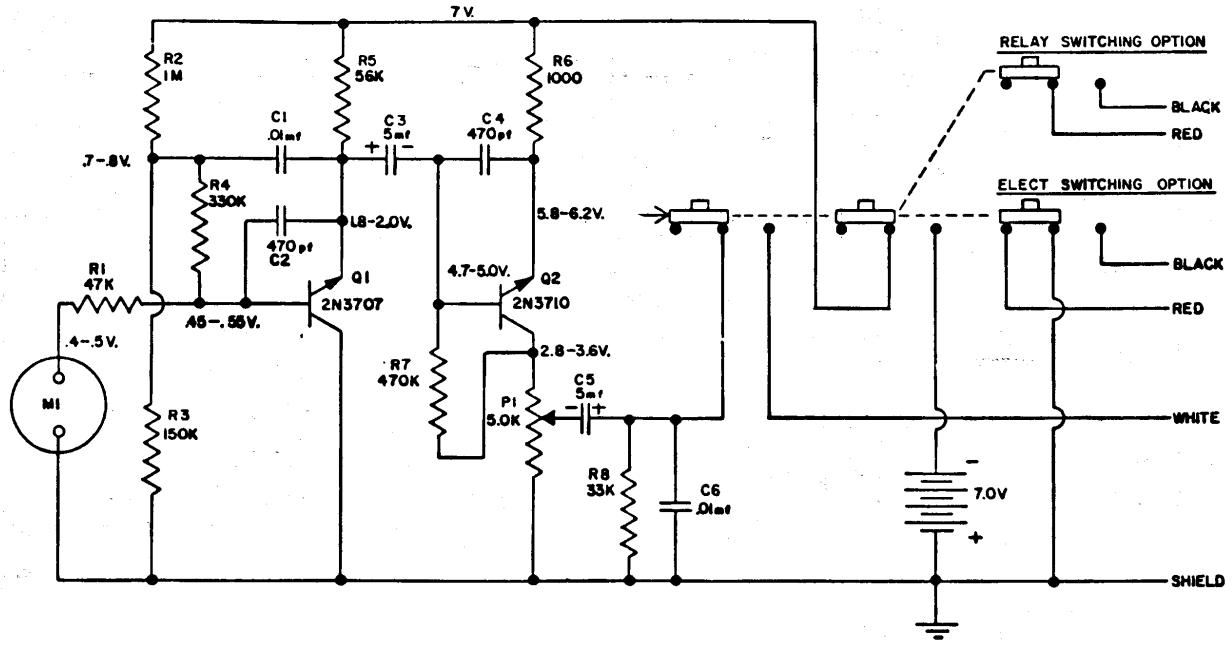

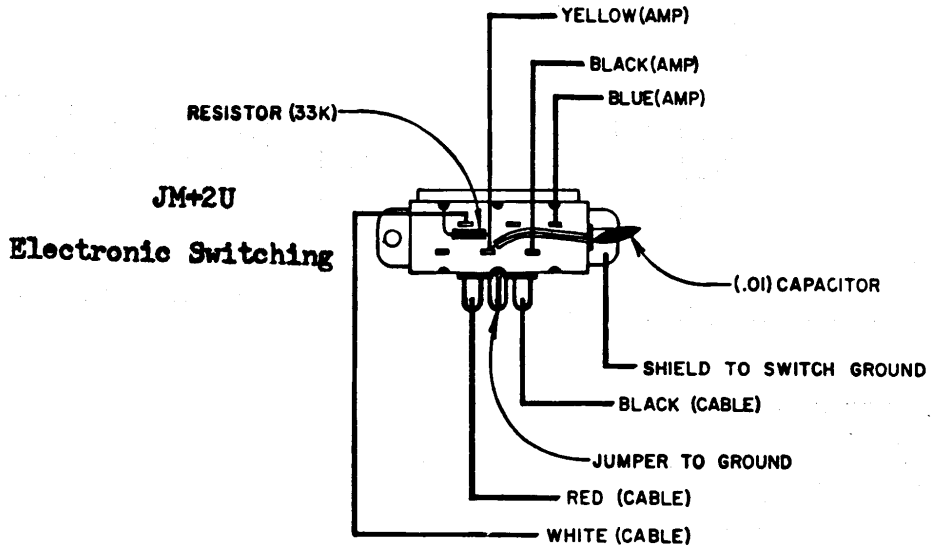

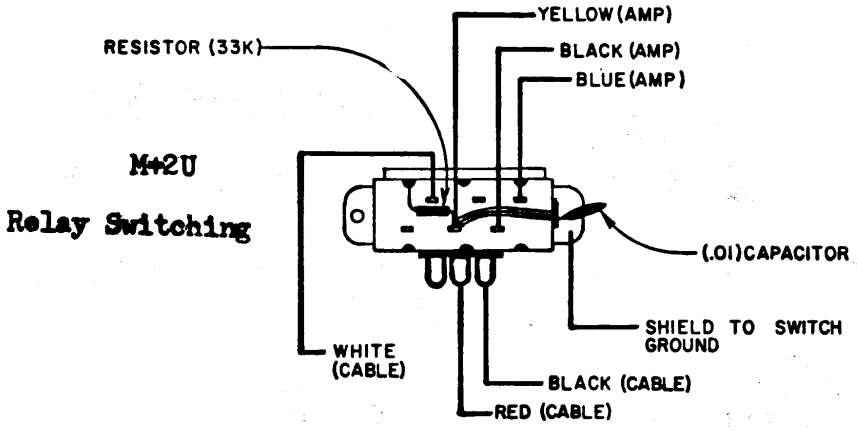

CBTricks.com

www.g7syw.com